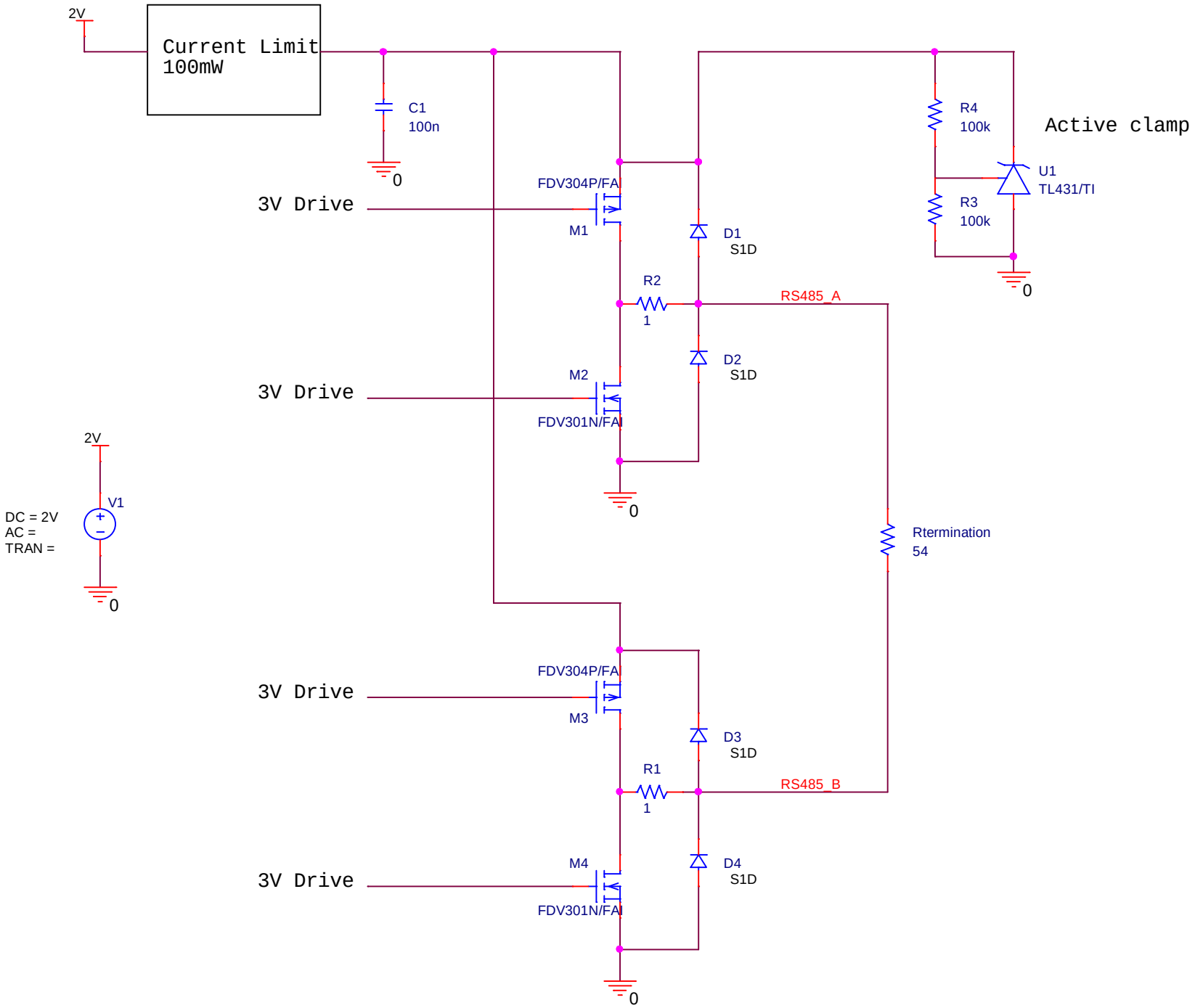
2V
Current Limit
100mW
C1
100n
0
3V Drive
FDV304P/FA
M1
D1
S1D
R2
1
RS485_A
D2
S1D
3V Drive
M2
FDV301N/FA
0
R4
100k
Active clamp
U1
TL431/TI
R3
100k
0
2V
V1
DC = 2V
AC =
TRAN =
0
Rtermination
54
3V Drive
FDV304P/FA
M3
D3
S1D
R1
1
RS485_B
3V Drive
M4
D4
S1D
FDV301N/FA
0